Warehouse safety manual

Use, inspection and maintenance of conventional adjustable pallet racks

MECALUX

Summary

A manual outlining the use and maintenance of conventional adjustable pallet racks (APR)

3 Introduction

4 Key warehouse components
4 Unit loads
5 Slab or floor
6 Handling equipment
7 Storage systems

8 Conventional adjustable pallet racking (APR)

11 Using your racks and handling equipment
11 Unit loads
13 Forklifts
17 Conventional adjustable pallet racking (APR)
21 Inspection and maintenance

21 Inspecting your storage system
22 Inspecting frames
24 Inspecting racking bays
25 Inspecting beams
26 Assembly tolerances
27 Inspecting floors and aisles
28 Inspecting unit loads
30 Inspecting handling equipment
30 Other considerations
31 Safety checklist

Introduction

All warehouses in operation hold productivity and working conditions as universally important concepts. That is why safety must come first in the day to day usage of your racking system. Safe, strictly observed warehouse practices will keep personnel entrusted with working for a company from being at risk.

The focus of this manual is installations where unit loads, generally palletised or in containers, are transported by forklifts or other handling equipment. It does not address the risks involved with the manual loading of goods.

A well-maintained pallet rack warehouse will facilitate all work in progress. However, misuse of any part of the storage system may cause an accident.

A warehouse includes these principal elements:
- Slab or floor
- Unit loads
- Handling equipment
- Racks

To prevent possibly dangerous situations –where personnel could get hurt, or there could be costly stops in service and damage to the installations or goods–, the following measures should be taken:
- **Prevention**: train personnel to use the installation and equipment properly.
- **Inspection**: have ongoing checks by personnel to make sure everything stays in top condition.
- **Maintenance**: if there is a defective or malfunctioning warehouse component, it must be fixed or replaced immediately.

The safe, sound use of an installation is achieved through the collaboration of the users and the racking and handling equipment manufacturers.

The Mecalux Group has put this manual together to guide its customers on how to use a racking system correctly. Its contents are based on the diverse recommendations from European agencies in this sector (FEM, INRS), the EN 15635 standard (Steel Static Storage Systems. Application and maintenance of storage equipment.), technical notes on prevention from the NTP (the Spanish National Institute of Workplace Safety and Hygiene), and more than 50 years of experience in the warehousing sector.

As such, this manual should be read carefully, and its recommendations applied. The Mecalux Group in on hand to answer any questions installation users may have on the subject.

Please note!

Responsibility for the surveillance, use and condition of the installation lies with the customer. The customer must convey the content of these manuals to those in charge of the warehouse and to warehouse users.

This manual is based on the guidelines found in the EN 15635 standard.

The user must also comply with the specific standards for this type of installation in force in each country.

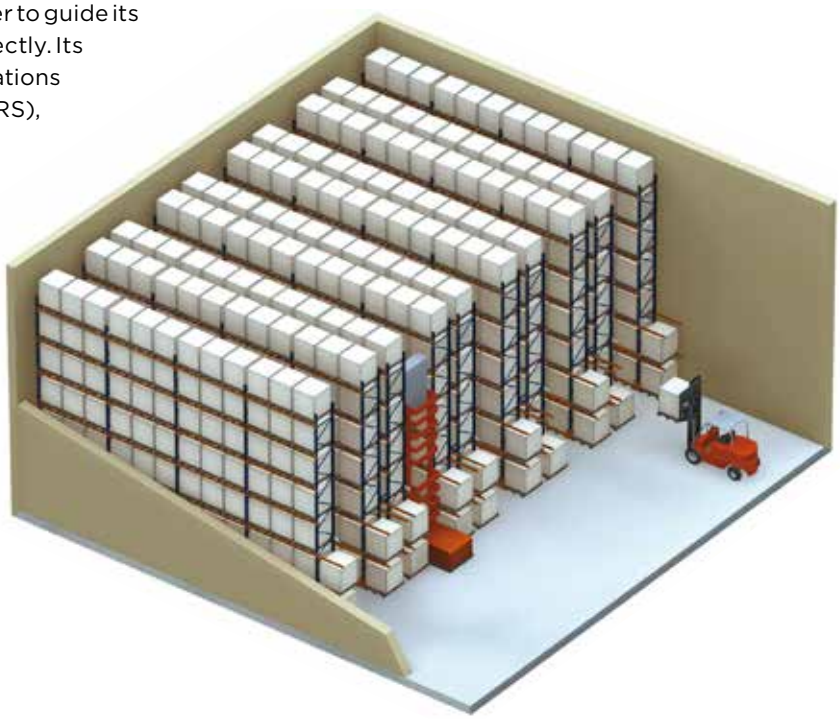

Key warehouse components

Unit loads

Unit loads are determined by the product to be stored and any additional elements required to move and store this product (pallets and containers).

These bases have different shapes and are made of different types of materials:

- Wooden pallets
- Metal or plastic pallets
- Containers

The construction of these bases must comply with the following requirements:

- The specifications found in ISO, EN and UNE standards.
- The ability to withstand the deposited load .
- The model is suited to the installation's design.

Special considerations must be taken into account when providing load storage on plastic or metal bases and containers. These considerations must be clearly identified and firmly established prior to the installation's design. Additional measures might well be necessary, which may result in higher system maintenance.

Wooden pallet

Metal or plastic pallet

Container

Both the weight and maximum dimensions of the palletised loads must be predetermined. The system can then operate correctly, in terms of strength and sizes. Unit loads can take on different shapes once goods have been placed on the pallet.

Fully covered and aligned

Overhanging and centred

Fanned

Bowed

Slab or floor

A slab is a basic structural component for operating a warehouse, which is determined and constructed as per the following:

- **Characteristics such as stability and strength**, which must withstand forces transmitted by the unit loads and the handling equipment. As a minimum, the concrete must be of C20/25 quality (according to EN 1992), with a minimum strength of 20 N / $mm^{2.}$

- The **planimetry or levelling of the slab or floor**, which must be done according to the specifications found in the EN 15620 standard.

Slabs or floors are available in several finishes (concrete, bituminous materials, etc.). When using bituminous materials, special attention must be paid to the design of the racking.

A slab's thickness and geometrical features must be well-suited to fastening racking footplates to the floor with anchor bolts.

Handling equipment

Mechanical or electromechanical equipment is not only used to load and unload goods from the racks, but also for transporting these goods from place to place.

The most commonly used types are:
- **Stackers**. Driver sits on board or uses foot-operated models.
- **Counterbalanced forklifts**. With three or four wheels.
- **Reach trucks**. Counterbalanced with a retracting mast.
- **Extra-tall forklifts**. Divided into turret trucks, side loaders and order-pickers.
- **Multi-directional forklifts** or four-wheel steered trucks.
- **Stacker cranes**. For automatic installations.

Stacker

Counterbalanced forklift

Reach truck

Turret truck

Side loader

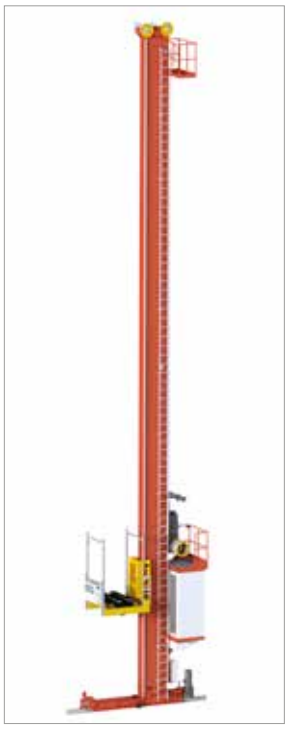
Stacker crane

Choosing these tools is the key to properly handling a palletised warehouse. To do so, the following information must be closely considered:

- Sizes
- Manoeuvring aisle needed
- Maximum lifting height
- Maximum load lifting capacity

A warehouse's capacity depends in great measure on these factors, especially the manoeuvring aisle and lifting height.

The machine must have a load capacity that is perfectly suited to the unit load.

The fork size or storage implements and accessories must be suited to the unit load.

Storage systems

Below, it explains the names used to classify the parts of a storage system.

A storage system is a set of metal racks designed to store unit loads in a safe, organised manner.

According to the EN 15620 standard, and the handling equipment in use, storage systems can be classified as follows:

- **Class 100**: pallet racks with narrow aisles operated by automatically controlled stacker cranes.
- **Class 200**: pallet racks with narrow aisles operated by automatically controlled stacker cranes with additional positioning.
- **Class 300**: pallet racks with narrow aisles operated by forklifts, which do not turn in the aisle to load or unload unit loads from the racks. Forklifts are driven the length of the aisle along mechanical guide rails or induction cables.
  Class 300A: the operator goes up and down with the load and uses manual height positioning. When the operator remains at ground level, there is a closed-circuit camera system or the equivalent.
  Class 300B: the operator stays at ground level and does not have indirect viewing systems.
- **Class 400**
  Wide aisles: pallet racks with aisles wide enough so the forklift can turn 90º when loading and unloading the racks.
  Narrow aisles: pallet racks with a narrow aisle that can be used by specialised forklifts.

Please note!

Any change, modification or expansion of the installation must be analysed and authorised by the Mecalux Group.

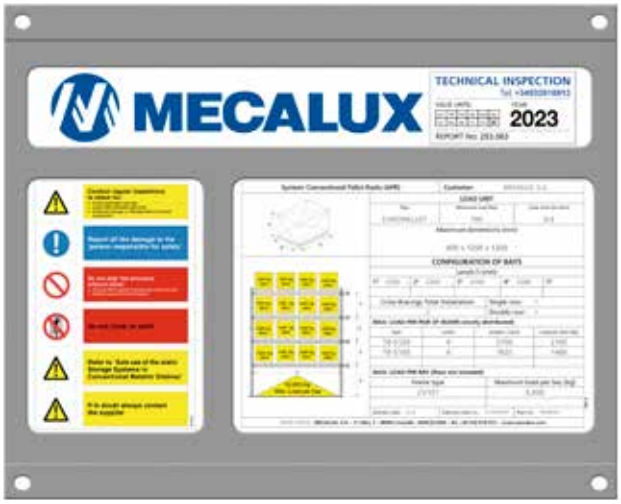

This safety manual only deals with conventional adjustable pallet rack (APR) systems.

The system's design is determined from data or specifications provided by the user or representative. In particular, the characteristics to consider for conventional pallet rack systems are established in the EN 15629 standard (Steel static storage systems - Specification of storage equipment). Nevertheless, the primary data for any storage system are:

- Unit loads
- Location of the installation
- Handling equipment used
- Premises or space being occupied
- Characteristics of the slab or floor
- Intended use of the warehouse

By defining these characteristics, Mecalux can design the best storage system for each customer,always keeping their instructions in mind. All of these specifications will be shown in the quote's technical documents and the safe load warning notice placed at the storage system's entrance.

Conventional adjustable pallet racking (APR)

These metal racks require lifting equipment (forklifts) to store a variety of products and provide direct access to the goods. Primarily designed for palletised unit loads, these racks will occasionally need certain levels set up for manual loading.

Description

The primary components of a conventional adjustable pallet rack installation are:

- **Frames**: vertical metal components to support the different load levels.
- **Beams**: horizontal metal components in which the loads are deposited and which define the load level (gaps or openings) together with the frames.
- **Anchor bolts**: metal parts used to fasten the structure to the floor according to the forces the racks must bear and the characteristics of the floor.

The use of the following components is recommended to reduce the risk of accidents:

Protectors
These metal parts are designed to absorb impacts during handling or manoeuvring of unit loads.

As specified in the EN 15512 standard:

- These protectors must prevent blows to the rack uprights, thanks to the proper training of operators and by adopting the appropriate safety measures, which includes the use of protectors.
- As a minimum, protectors must be placed on the corner uprights in circulation aisles or at aisle junctions where forklifts change direction.

1. Frame
2. Beam
3. Heavy-duty footplates (base plate)
4. Levelling shims
5. Safety locking system
6. Upright protector and end frame protector
7. Row spacer (frame spacer)
8. Support crossbeam
9. Container support bar
10. Anchor bolts
11. Pallet crossbeam
12. Galvanised picking level
13. Standard/Melamine chipboard
14. Fall protection mesh (safety mesh)
15. Drum support

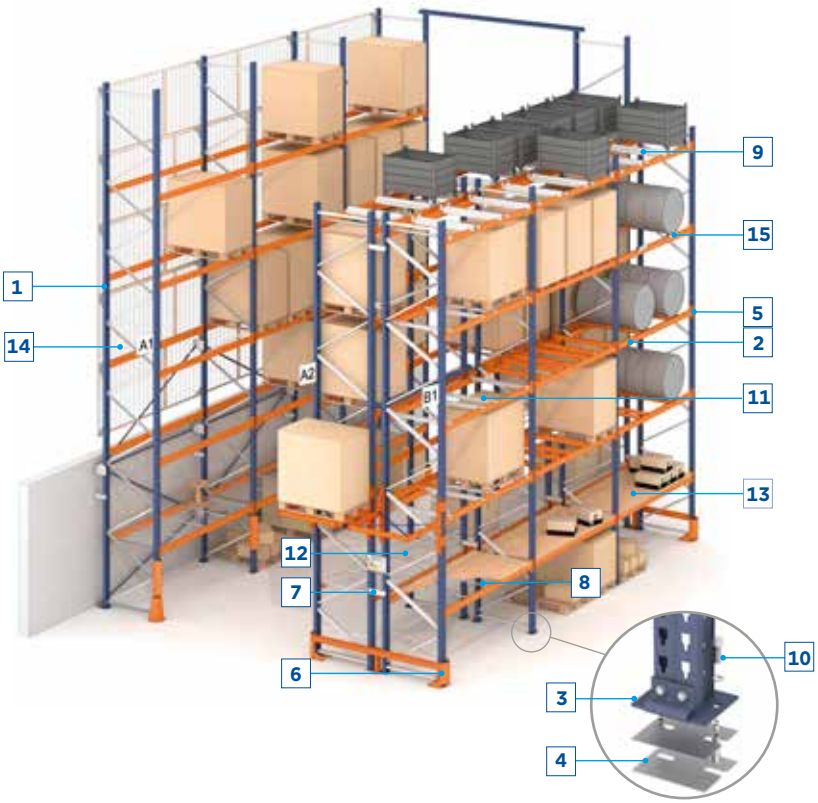

Your installation might only include some of the components mentioned above.
The constructive system of your warehouse is listed in the layout and technical documents of your quote.

Upright protectors
A component used mainly to protect uprights in operating aisles.

Side protectors
A component used chiefly to protect upright corners in circulation aisles and/or junctions.

Frame protectors
A component used to protect frames located in the main circulation aisle and/or junctions. All installed protectors must be a minimum 400 mm high and capable of absorbing forces of at least 400 mm in any direction and at any height between 100 and 400 mm, according to the EN 15512 stipulations, section 6.4.1. c.

Upright protector

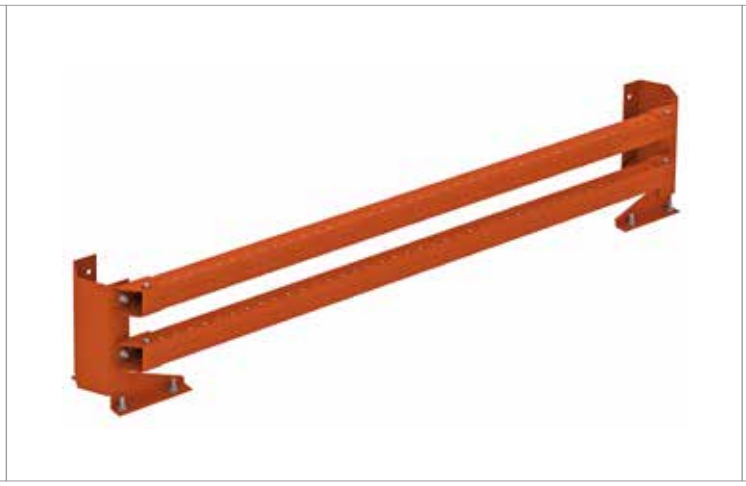

Frame protector

Side protector

Safety mesh
Safety mesh must be installed when the unit load is not shrink-wrapped, or its safety features are insufficient to prevent the merchandise from falling. A single racking bay that borders a work or foot traffic area must be protected by safety mesh to prevent the accidental toppling of materials, possible crushing, etc.

Furthermore, provided that the initial specification requires them, there are:.

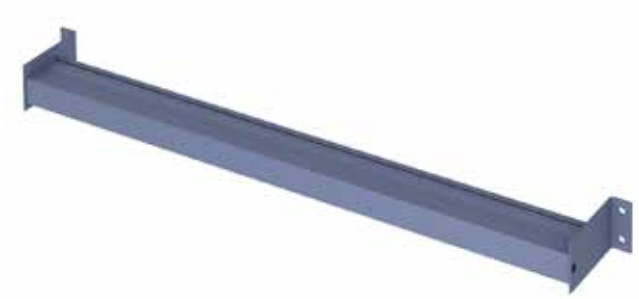

Positioning bars
A profile placed in such a manner that the pallet (not the load) is in constant contact. This component can only be placed when the racks have been designed to sustain the impact and the thrusts indicated in EN 15512 standard.

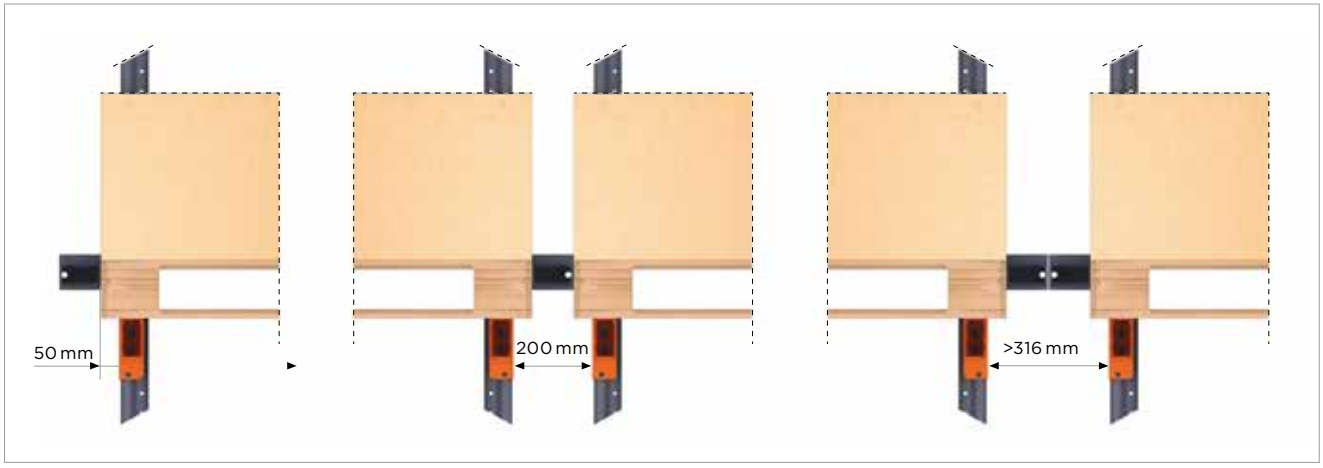

Safety bars
This system prevents unit loads from toppling off the racks. However, it is not designed to withstand forces applied during load positioning. The load (not the pallet) presses against the safety bar. So, this component is not meant to serve as a brake during load manoeuvring.

This accessory is designed as a safety feature to prevent potential toppling or collisions of the unit loads during a manoeuvring error by handling devices. It can be placed as long as the design includes the required space.

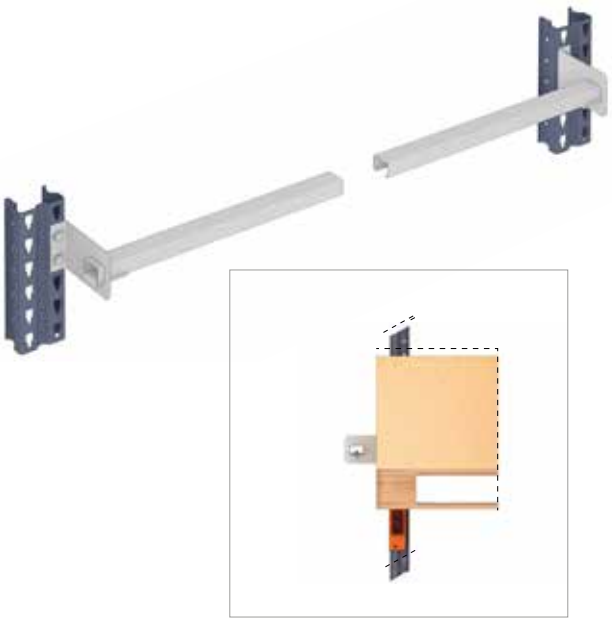

Single alignment

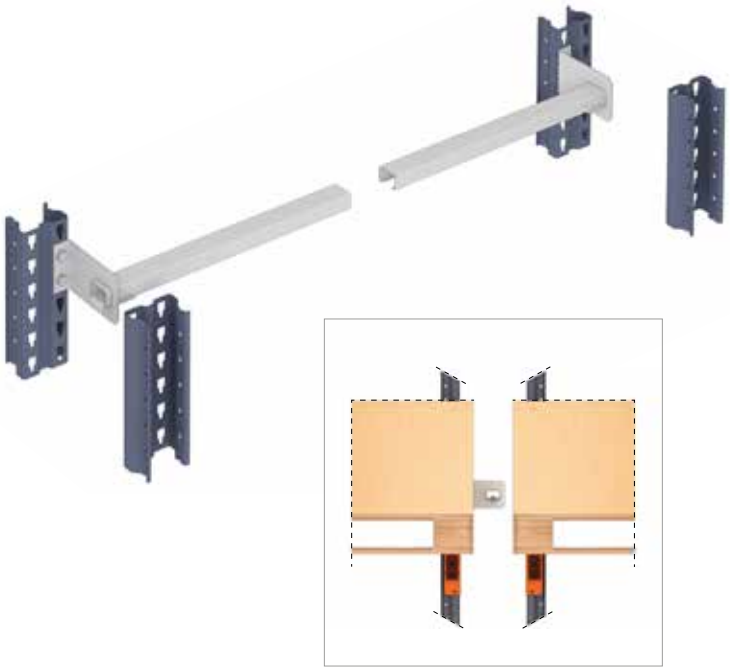

Double alignment

Using your racks and handling equipment

Unit loads

Unit loads, formed by a pallet or a container plus the merchandise inside it, must adhere to the following requirements:

- Adjust to the size considered in the racking design, meaning it must not surpass either the maximum defined weight or size (width, depth and height).

- The pallet or container must correspond to the established design and not show any type of damage or wear.

Non-conforming unit loads are those which are damaged or show wear, as defined in the section called "Inspecting unit loads" in this safety manual. A control system must be established to prevent the recirculation of damaged pallets in the warehouse.

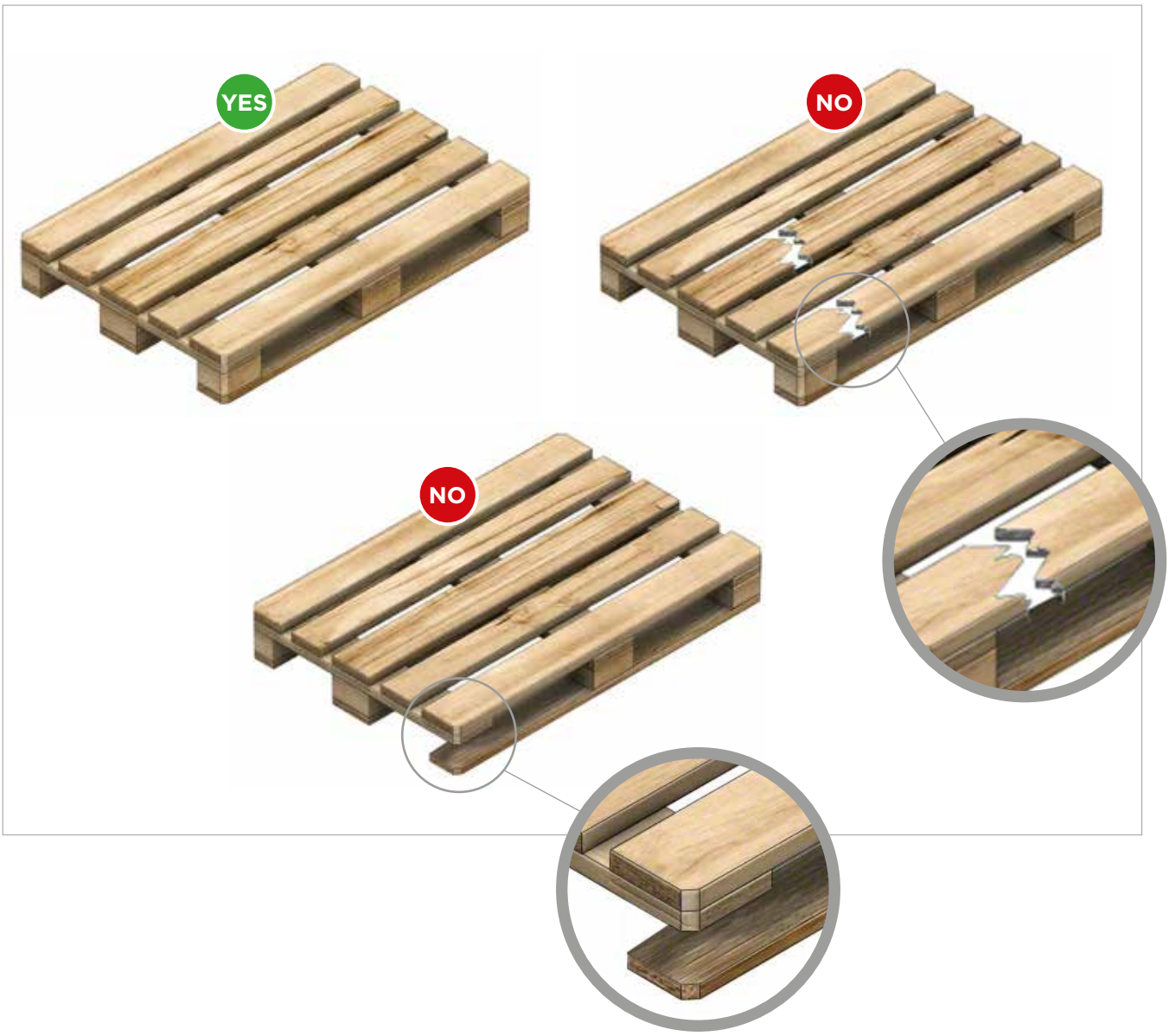

- The entire unit load must be stable and compact due to its proper distribution, with the goods fastened or tied down using straps, shrink-wrapping, etc.

- Goods must be uniformly distributed on the pallet.

- Goods must be correctly stacked on the pallet.

Standardised pallets adhere to the stipulations in the corresponding regulations:

- **EN 13382**
  Flat pallets for materials handling. Principal dimensions.

- **EN 13698-1**
  Pallet production specification. Construction specification for 800 mm x 1,200 mm flat wooden pallets. (part 1)

- **EN 13698-2**
  Pallet production specification. Construction specification for 1,000 mm x 1,200 mm flat wooden pallets. (part 2)

Forklifts

Safe driving

- The forklift operator must be specially trained.
- The forklift must be appropriate for the load and area where it is being operated.
- Extreme prudence must be taken when turning.
- Avoid turning on ramps or slopes.
- Do not use the forklift as a means of transporting personnel.
- Maintain a minimum distance equivalent to three forklifts between forklifts.
- Always respect the specific handling regulations for each company.
- Pay close attention to where and how the forklift is parked when not in use.
- Always face the direction the forklift is moving.
- While driving, avoid excessive velocity, sharp movements and improperly placed loads.

Load requirements

- Loads with or without pallets must adhere to the minimum requirements that make it:
  - Capable of being handled by forks or the proper tools.
  - Stable enough to keep together during all handling and transport operations.
  - Resistant to the physical demands handling requires.
- Be transported between 15 and 20 cm off the floor.
- If the volume of the load impedes driver visibility, the forklift must be operated in reverse gear.
- Pay special attention while transporting and depositing cylindrical loads such as pipes or logs as they can slide off the forklift.
- Do not take unnecessary risks when the weight distribution of a particular load is unknown.
- Act prudently.
- Do not cover the onboard safety cabin. This causes a loss of visibility.

Load – forklift interaction

The forklift is similar to a balanced scale, but it is possible to lose balance longitudinally by overloading it, situating the load incorrectly, or positioning it at the wrong height. Consequences include: tipping forwards, a loss of steering, damage to the load being handled, etc.

Transversal balance can be lost when carrying an off-centre load, turning at an excessive velocity or turning while the load is positioned at an improper height. Consequences include: tipping the forklift over on its side (a serious or fatal accident), damage to the load being handled, etc.

Moving a load

The centre of gravity of the entire load must be kept as low as possible, which is why loads are carried on the lowest fork level, around 15-20 cm off the floor, thus giving plenty of visibility by limiting the size and height of the load. The maximum height of the load must be less than the height of the fork carriage. If loads must be carried higher than the mast, first check whether it should be joined or tied to the rest of the load. Transporting loads is always done using both forks, with the load always distributed evenly to ensure stability.

Never travel or leave the forklift parked with the forks raised (figure 1).

Always face the direction the forklift is moving.

Loads must be carried while fastened accordingly with bands, straps, shrink-wrapping, brackets, etc. Any loose material must go into containers.

In cases where visibility is difficult due to the load's volume, use the reverse gear to transport it (figure 2).

On slopes or ramps, drive forward going up and reverse going down, so the mast is always inclined backward in a straight line (figure 3).

Figure 1. Do not transport with the load in a raised position.

Figure 2. Moving bulky loads.

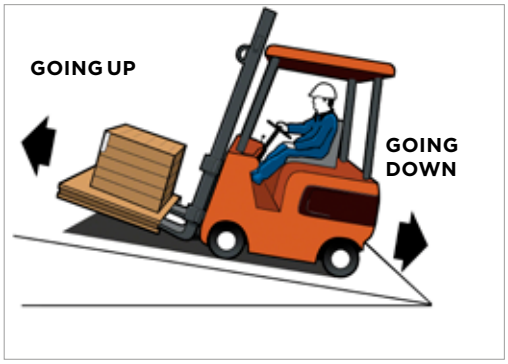

Figure 3. Driving on slopes.

If there is a lack of visibility due to meteorological or environmental conditions, such as darkness, use all available lights.

Use the horn to warn nearby personnel at intersections with blind spots, always facing the direction the forklift is moving. At intersections and traffic lanes where both forklifts and pedestrians may be travelling, pedestrians have the right of way. If a forklift is carrying out certain manoeuvres (loading, unloading, lifting, etc.) in these traffic areas, pedestrians must wait until they have finished their tasks before continuing on their way (figure 4).

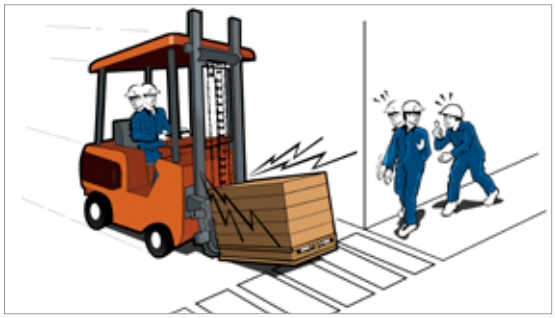

Figure 4. Slow down at intersections.

Pay special attention when driving in reverse in narrow areas with stationary objects. Avoid driving excessively fast and making sudden movements (figure 5).

When two forklifts are travelling in the same direction, a minimum distance equivalent to three forklifts, including their loads, must be kept between them (figure 6).

Figure 5. Pay attention to the installation's size limits.

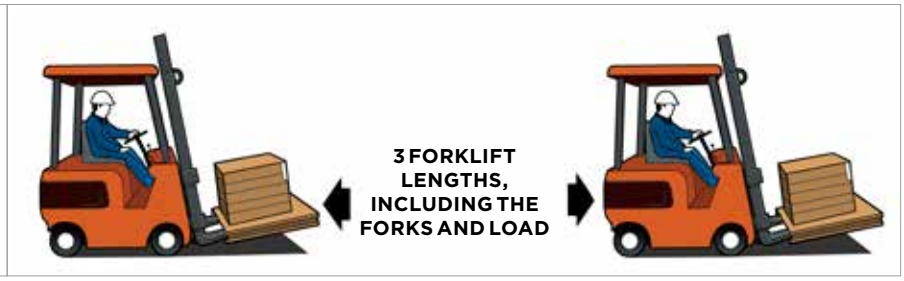

Figure 6. Keep a proper distance between two forklifts.

Figure 7. Work centre speed limit.

Figure 8. Losing control of the forklift.

Respect all rules and traffic signs. The maximum speed limit inside a work centre is 10 km/h (6 mph), which is a brisk walking speed (figure 7).

Ramps used to cover small differences in floor heights must be fastened to the floor to keep them from sliding.

The operator's entire body must always be kept inside the vehicle (the safety cabin). At no time may drivers operate the vehicle with their legs or arms hanging outside.

Verify the quality and strength of the floor being travelled on and check whether it can support the weight of the forklift and the load.

If the forklift drips oil, its motor overheats, or brakes slip, etc., it must be parked in an area which does not interfere with personnel, equipment or the work in progress. These circumstances must be reported to the immediate superior.

If an emergency occurs and the forklift goes out of control while transporting loads or carrying out operations (figure 8):

- Do not jump out.
- Hold the steering wheel firmly.
- Press your feet firmly to the floor.
- Lean in the opposite direction of the impact.

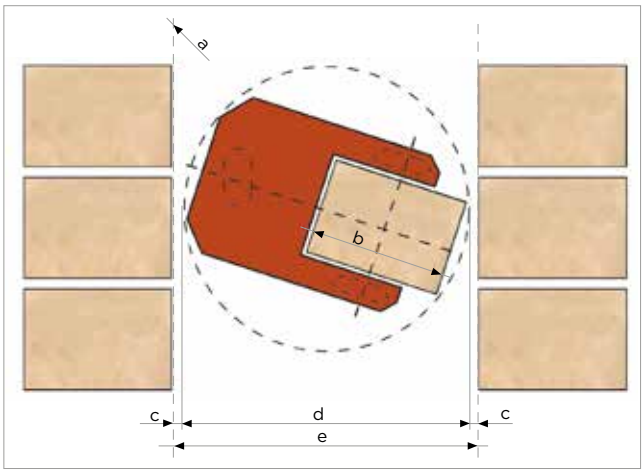

a. Maximum line of pallet exits.
b. Maximum dimensions of pallet and load.
c. Clearance.
d. Forklift and load turning diameter.
e. Open aisle area between loaded pallets.

Loading/unloading operations

The structure of conventional pallet racks is calculated to work under normal service conditions (static loads). These conditions are not fulfilled if forklift operations cause collisions, use pull/push movements, place loads suddenly, etc.

Therefore, besides properly training staff in the use of forklifts (i.e. accident prevention), the following aspects must be specifically considered:

- The aisle between loads (e) must allow for a forklift and its load to turn properly without it colliding with the racks (d), due to the necessary clearance (c).
- The speed used while moving, loading and removing the load from the rack must be appropriate and suited to the nature of the unit load.
- The forklift must move vertically toward the gap and be positioned frontally, with the load raised slightly off the floor.
- No bumping, rubbing, or dragging must occur when inserting or extracting the forks from the pallet (figure 9).
- The load must be lowered and raised with the forks centred and in the horizontal position. This operation must be done at the lowest speed possible.
- Never centre the unit load by dragging. Instead, lift it for repositioning (figure 10).
- There must be a clear view of the crossbeams and frames bordering the space where the manoeuvre takes place, as well as the unit loads adjacent to the load being handled.

Figure 9. Beam overloading from not lowering a pallet horizontally .

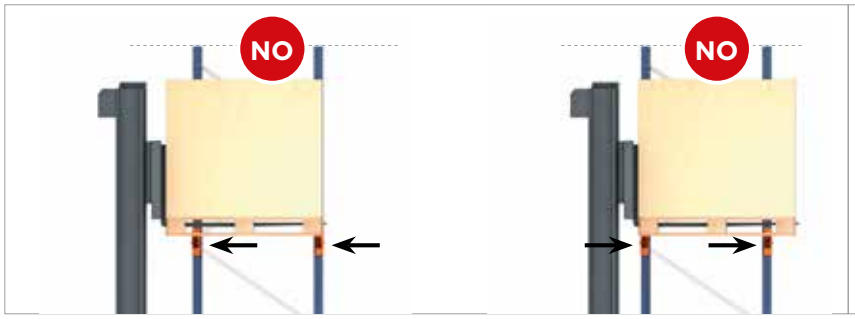

Figure 10. The beam rolls due to dragging or pushing.

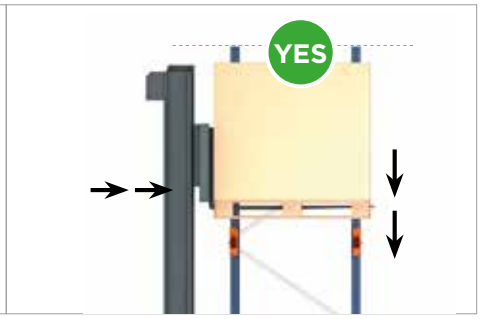

How to place the pallet on the beam.

Conventional adjustable pallet racking (APR)

In addition to overloading, accidents occur in racking bays for other reasons, such as:

- Loading methods (in the lane, on beams, in bays)
- Poor floor conditions
- Racks in poor condition

Factors to bear in mind when using conventional pallet storage systems include:

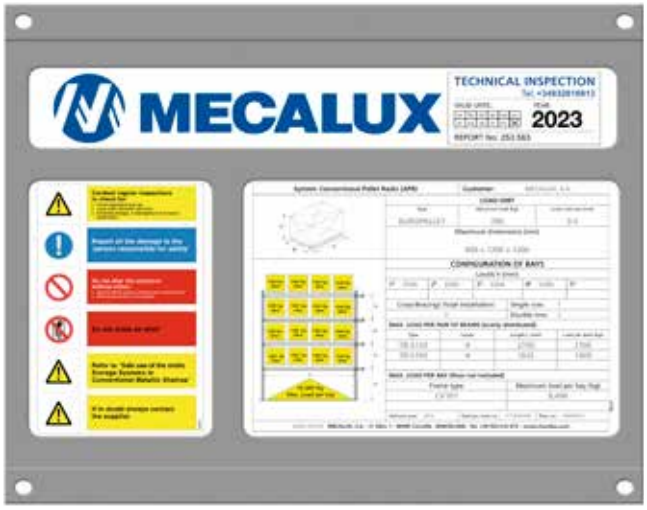

Factor 1. Established design
The established design must not be changed in any shape or form (unit loads, geometry, etc.) without consulting the Mecalux technical departments.

It is expressly prohibited to:
- Modify the height of the levels ,
- Modify the number of levels (even when maintaining the load per frame),
- Modify the beams,
- Remove or add levels,
- Use the installation in a way that damages its primary, components (frames, beams, locking systems, braces, etc.) ,
- Use the installation without all its components (frames, beams, locking systems, braces, etc.),
- Use the installation when a frame is out of alignment.

Please note!
The installation's characteristics are described in the technical notes of the Mecalux quote and on the safe load warning notice placed at the entrance to the storage system.

Factor 2. Placing unit loads
When there are more than two unit loads per load channel, it is recommended to place the ones on the ends first to maintain a certain placement reference, as shown in the drawing.

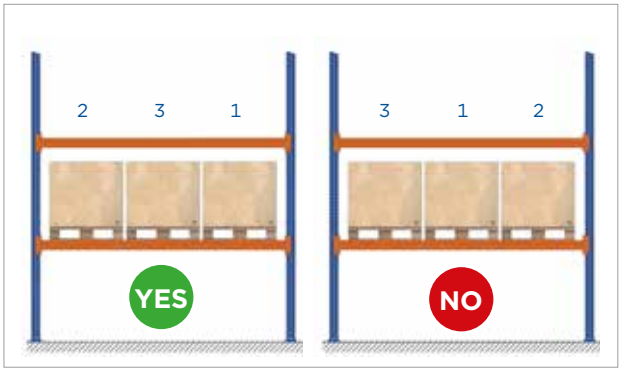

Placement order

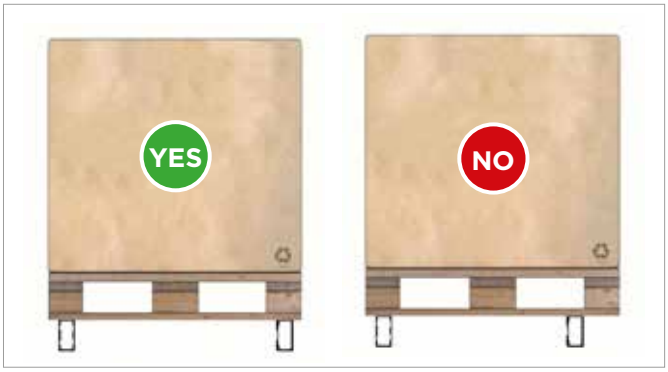

Side centred. The pallet must always be centred over the support beams.

Factor 3. Clearance margins

The clearance indicated in the following figure must be respected when placing pallets into position:

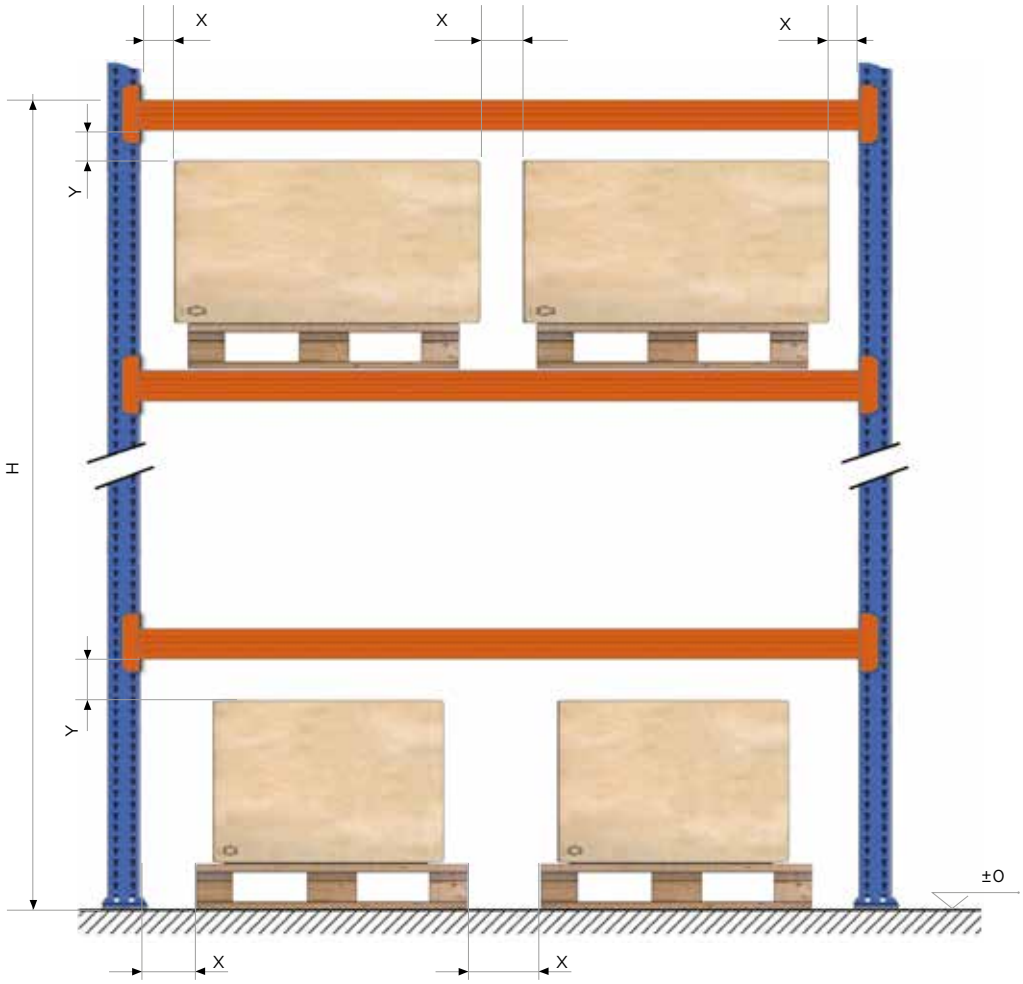

Lane clearance

Y = height between the pallet and the bottom of the beam for levels other than +0 height

X = minimum clearance between pallets or loads

Heights in mm

For levels between:	Class 400		Class 300A		Class 300B	
	X	Y	X	Y	X	Y
0 ≤ H ≤ 3,000	75	75	75	75	75	75
3,000 < H ≤ 6,000	75	100	75	75	75	100
6,000 < H ≤ 9,000	75	125	75	75	75	125
9,000 < H ≤ 12,000	100	150	75	75	100	150
12,000 < H ≤ 13,000	100	150	75	75	100	175
13,000 < H ≤ 15,000	--	--	75	75	100	175

Lane/space clearance table, according to EN 15620 applied from January 2009, where:
Class 400: counterbalanced forklift or reach truck.
Class 300 A: trilateral or bilateral VNA (very narrow aisle) truck with man-up operation.
Class 300 B: trilateral or bilateral VNA truck with operator at ground level.

Horizontal clearance in depths without stops

The following guidelines must be respected, except when the specifications require other clearances:

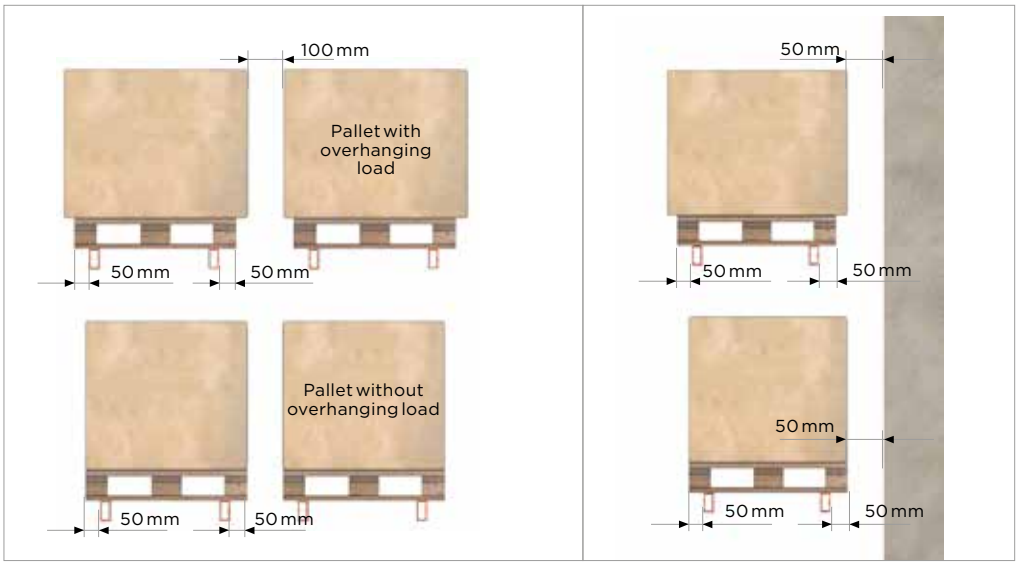

Double alignment

Single alignment

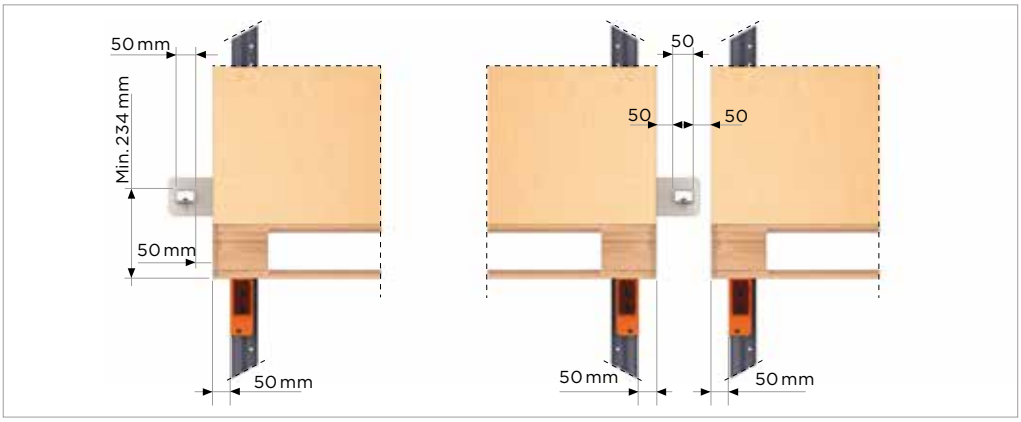

Single and double alignment with safety bar.

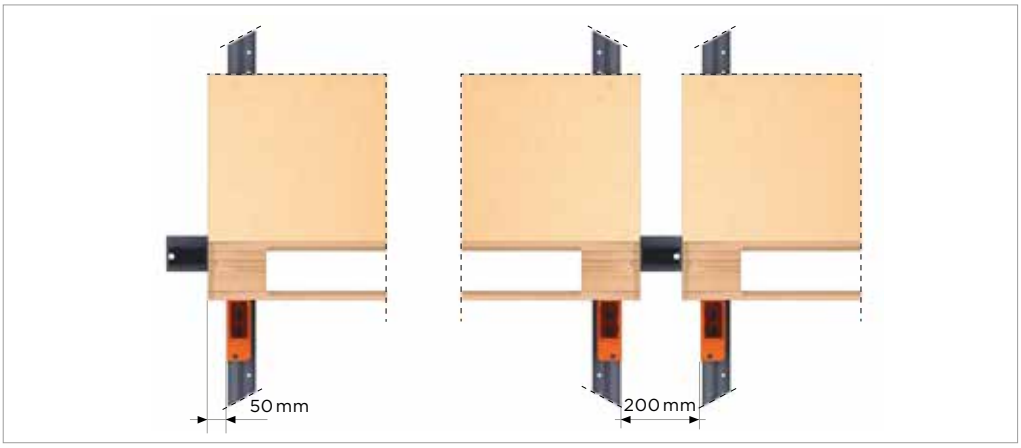

Single and double alignment with positioning bar.

Factor 4. Loading methods
Pallets must be placed with their lower braces perpendicular to the crossbeams, since:

- The support surfaces on the beam must be sufficient.
- The pallet or container corresponds to the model planned for the installation's original design.
- They must be able to bear the deposited load.

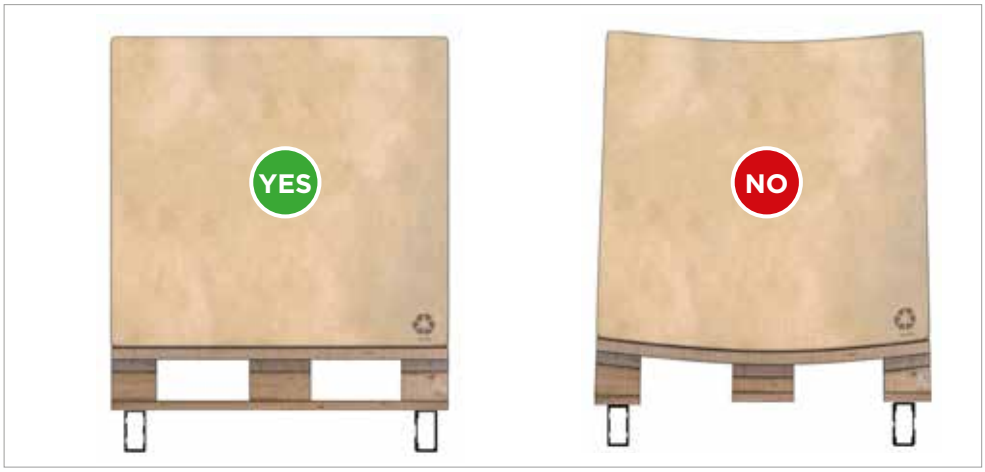

Avoid grouping loads on the centre of the beams, either by putting the pallets too close together or by changing the unit load.

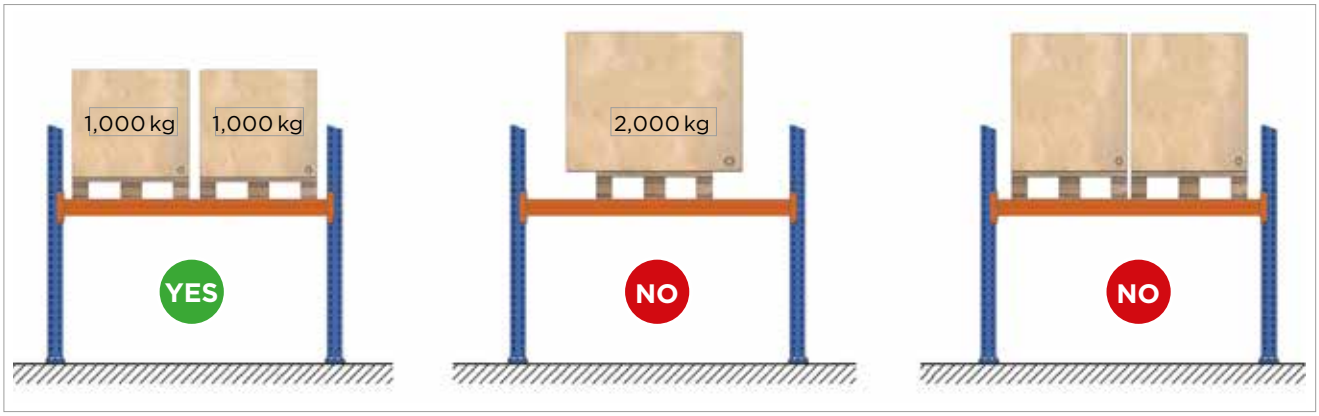

Grouping unit loads.

- The beams of the top levels are a good point of reference to facilitate pallet placement.
- A good solution for ground-level pallet placement is to paint lines showing where pallets should be placed, ensuring they do not encroach on the working aisle.

Inspection and maintenance

Inspecting your storage system

According to EN 15635:
There must be a person responsible for storage equipment safety (PRSES).Racking bays and the storage system area must be regularly inspected and done so specifically when any damage has occurred to either.

A thorough maintenance program must be carried out in the entire facility, with the recommendation that it be done by or as per the rack's manufacturer. These programs must include the following aspects, among others:

A. When establishing a preventive maintenance program, safety checklists should be created that help streamline inspections and ensure any detected irregularities are reported.

B. The establishment of a periodic inspection plan to detect, report and record plainly visible irregularities, such as: the order and cleanliness of storage and circulation areas, deformed structural components, defects in verticality, weaknesses in the floor, missing safety locking systems, deteriorated load units, etc., to proceed with their immediate repair.

C. If the degree of stock rotation and the number of working hours in the warehouse are both quite high, a specific plan of periodic inspections must be established to report any damages, which as a minimum must include:

- **A daily visual inspection** carried out by warehouse personnel to detect plainly visible irregularities such as: deformed beams and/or frames, cracks in the floor, absence of levelling shims, broken fasteners, missing safety locking systems, worn out unit loads, missing safe load warning notice signs, damage to the floor or slab, etc. and consequently proceed with their immediate repair or replacement.

- **A weekly inspection** carried out by the warehouse manager or the person responsible for storage equipment safety (PRSES), who must verify the verticality of the structure and all the components on the lower levels (1st and 2nd), properly notifying, classifying and reporting any damages.

- **A monthly inspection** carried out by the warehouse manager or the person responsible for storage equipment safety (PRSES), which also includes the verticality of all levels of the installation and the general orderliness and cleanliness of the warehouse, properly notifying, classifying and reporting any damages.

- **An annual inspection** carried out by an expert who is competent and experienced in this activity, who must properly notify, classify and report any damages.

All repairs or modifications which result from the racking status reports must be carried out by qualified personnel from the racking manufacturer or supplier and with the racks completely unloaded, except if a prior analysis has been performed on the risks of carrying out repairs with them partially or fully loaded.

After a blow, and depending on the resulting damages, any deformed structural component must be replaced, verifying the verticality of the racking. The new component must be identical to the one being replaced and must never have been heated (soldering), as this alters the mechanical properties of the steel. In any case, until replacements are carried out, the racking should be unloaded and taken out of service, with the proper signage in place.

It is necessary to investigate the potential causes of any damage to reduce or eliminate its recurrence. Any observation regarding the status of the structures and floor must be written down in a log, stating the date it was observed, the nature of the irregularity detected, any repair work done and the date. It also must include any information related to the loads.

The consequential damage assessment or safety issues must constitute the basis for establishing damage prevention measures.

Immediate warning
Any damage caused to the racks diminishes the resistance and safety coefficients considered in their calculation. As such, all damages observed in the installation must be immediately reported by any warehouse employee to the Person Responsible for the Storage Equipment Safety (PRSES).

Consequently, all warehouse personnel will receive formal instructions on how to safely operate the system, thus guaranteeing their own safety and that of others.

Important information about the customer/user responsibility according EN 15635:

The customer/user is responsible for the safety of others and for maintaining the equipment (racking, forklifts, etc.) in safe working condition.

As such, he or she is responsible for fulfilling the previously mentioned inspections and the standard's written requirements, among which include appointing a Person Responsible for Storage Equipment Safety and also implementing a risk prevention plan in said installation.

Inspecting frames

Illustrations A, B and C show a few examples of critical deformations.

A 1-metre long ruler is placed against the upright to properly check for structural deformations, placing its halfway point at the area of greatest deformation, as shown in drawings A and B.

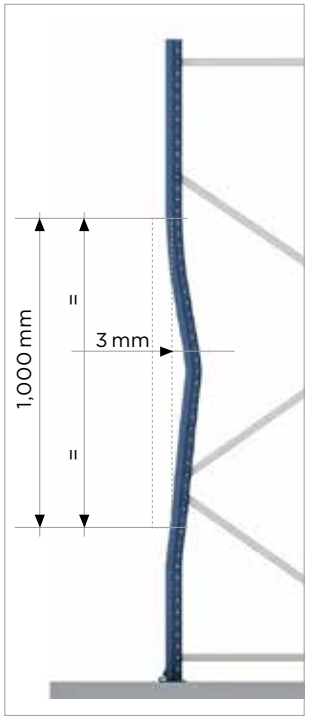

A. Uprights bent in the direction of the frame's plane, with a permanent deformation equal to or greater than 3 mm, as measured from the centre of a 1-metre long interval.

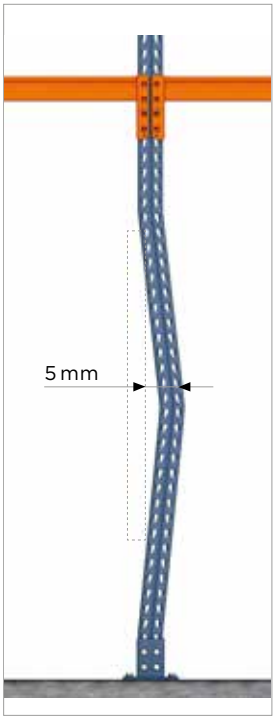

B. Uprights bent in the direction of the beam's plane, with a permanent deformation equal to or greater than 5 mm, as measured from the centre of a 1-metre long interval.

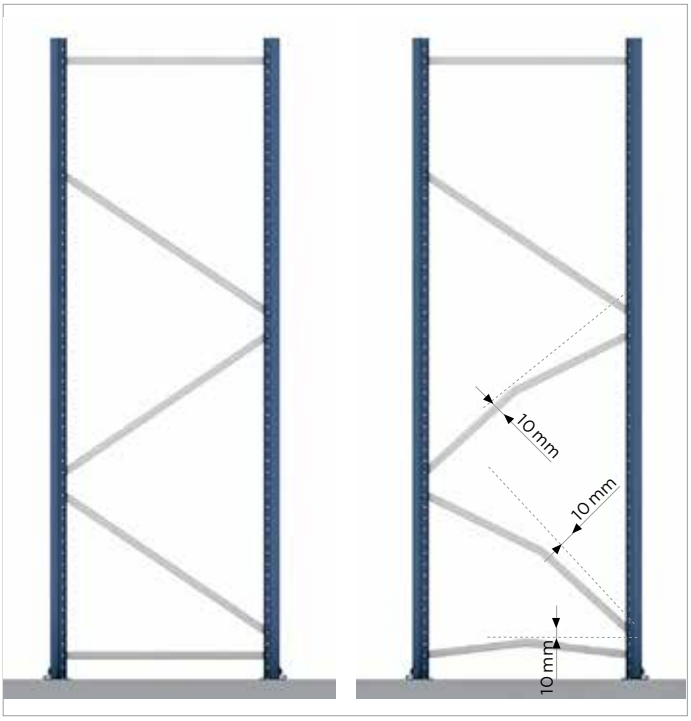

C. Permanent deformations equal to or greater than 10 mm in horizontal and diagonal components, in any direction. For lengths of less than 1 m, a 10 mm value can be linearly interpolated.

As a rule, profile deformation is classified as green, amber and red.

Green: when deformations are no greater than illustrated above. This level only requires vigilance, and the installation need not lower its storage capacity.

Amber: when the deformations are greater than the previous illustration but do not surpass twice its value.

Red: a red risk level is when the deformations are more than twice of those specified in the previous illustrations, or if there are creases, shearing or dents. The frame is considered unusable whatever the measured deflection may be, and thus classified as the highest damage level.

In any case, even when the indicated limits have not been reached, bear in mind that the frame's load capacity has been severely reduced. In case of doubt, remove the frame from service (unload).

Gouged upright

Dented upright

Inspecting racking bays

The European EN 15635 standard must be taken into account, as well as the UNE 58013 in Spain.

The following flow chart outlines the procedures to follow if a rack has been damaged.

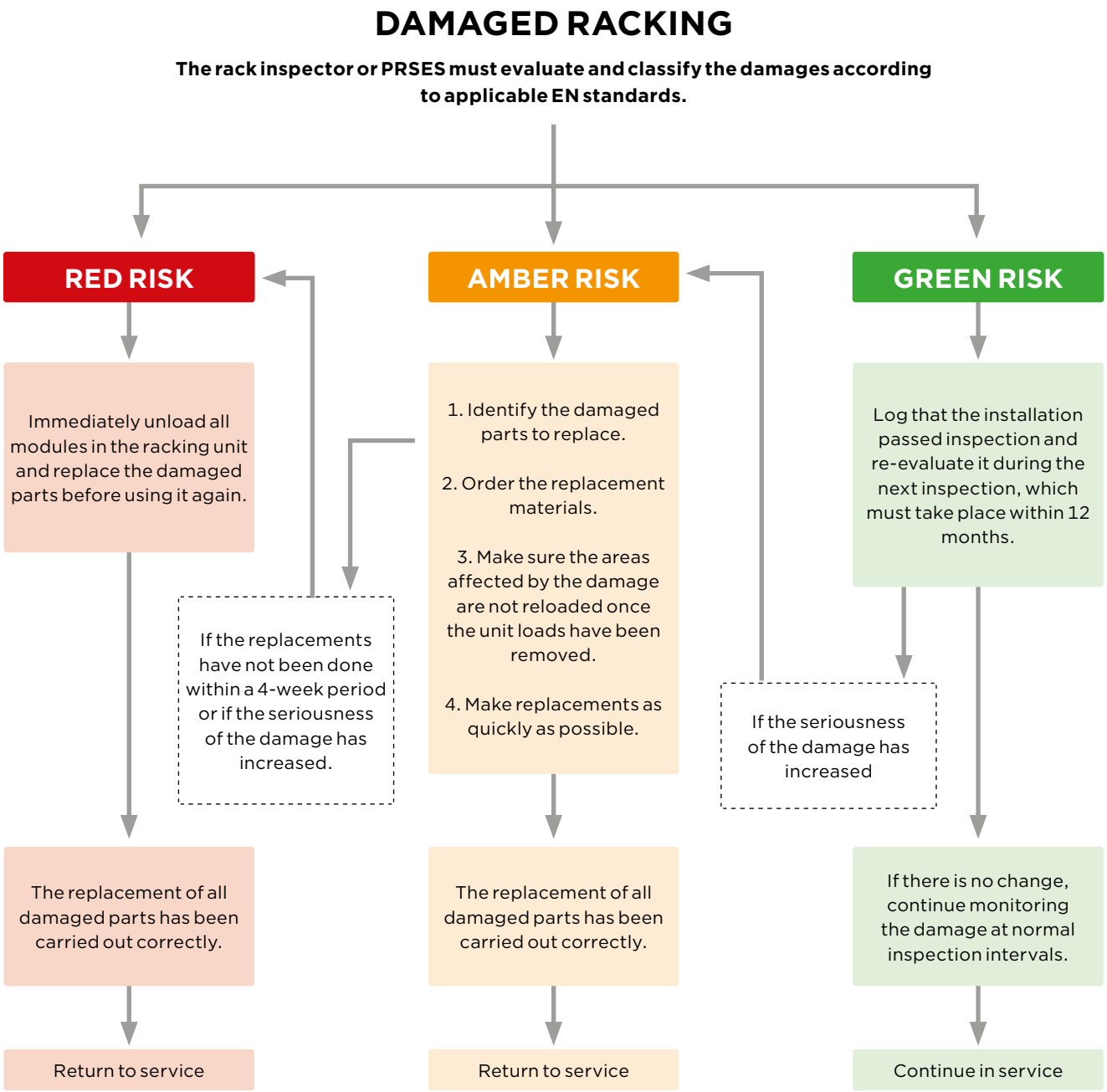

Inspection procedure for classifying damages

Inspecting beams

In the following cases, the affected beam must be unloaded and replaced.

- Permanent residual vertical deformation (what remains after unloading the beams) which is greater than 20% of the deformation or nominal deflection (L/200) when loaded.

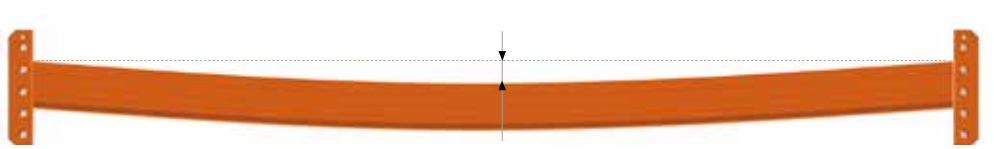

Vertical deformation of a beam

- Residual lateral deformation greater than 50% of the deformation or nominal vertical deflection (L/200) when loaded.

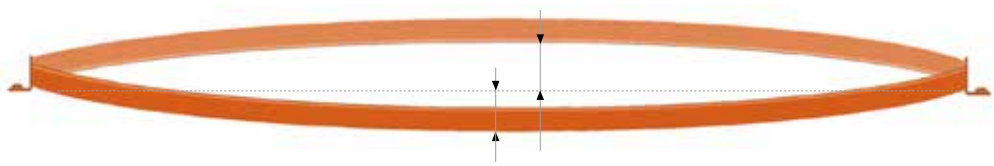

Horizontal deformation of a beam

- The welds on the safety pins are cracked or have fissures.

- One or more connector tabs are torn off, open or visibly cracked.

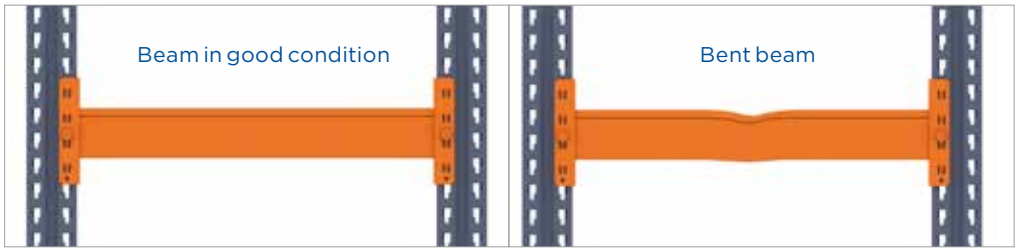

Localised damage in the form of dents, splitting, etc. must be evaluated one at a time. In case of doubt, the level must be unloaded, and the damaged beam changed.

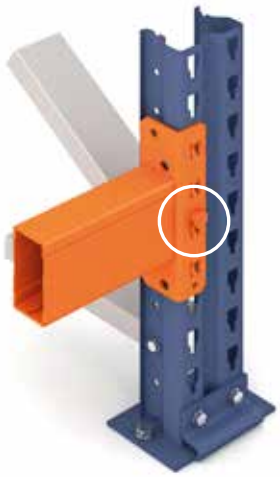

Locking system

It is essential that all beams include a safety locking system, to thus avoid a beam from accidentally slipping out of place.

Assembly tolerances

Once the racks are assembled and still unloaded, the installation must fulfil the tolerances in terms of the related verticality. This ensures that structural elements function properly.

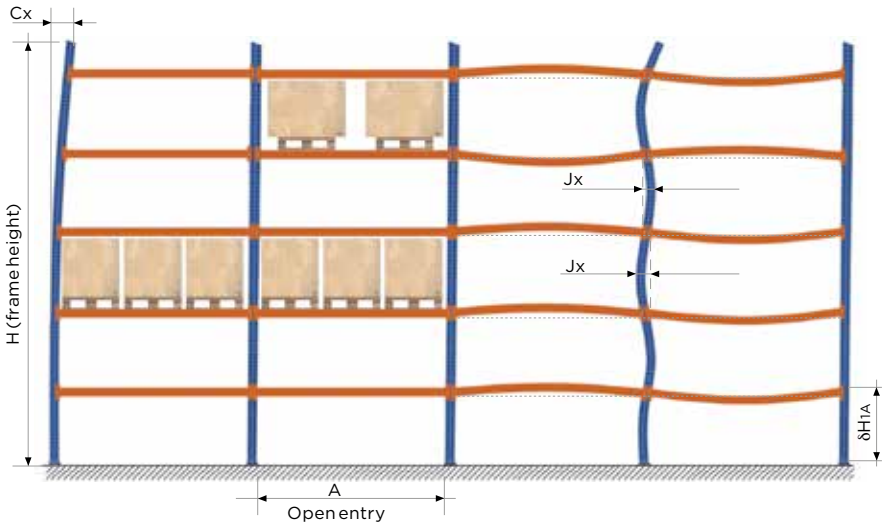

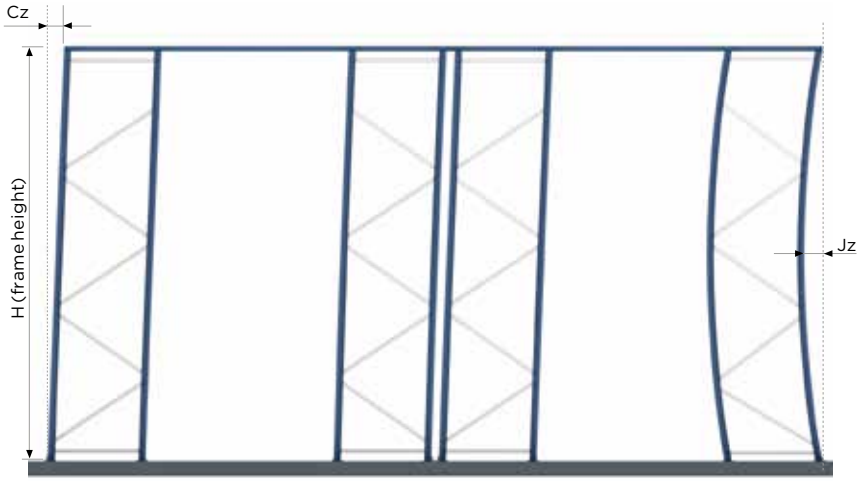

The maximum admissible measurements after assembly must not surpass the following values:

CLASSES 300 A and B
Cx: ±H/500
Cz: ±H/500 (with positioning)
±H/750 (without positioning)
Jx: ±3 mm or ±HB/750
Jz: ±H/500
δH_{1A}: The variation must be ±7 mm in each upright from the floor to the beams' upper part of the lowest level.

CLASS 400
Cx: ±H/350
Cz: ±H/350
Jx: ±3 mm or HB/400 (the highest of both values)
Jz: ±H/500

The variation between the upper part of the frontal beams and its lower part in the same space Hy: ± 10 mm (valid in both 300 and 400 classes).

In addition to the previously mentioned tolerances for 300 and 400 class racks, the stipulations mentioned in the EN 15620 standard must be fulfilled.

Inspecting floors and aisles

The floor, as a principal component of the installation, must be checked for the following attributes:

Planimetry
The floor must respect the horizontal alignment for which the warehouse has been designed. Otherwise, the system's aplomb could be affected with the resulting installation fall hazards. Any irregularities in the floor can be corrected by placing metal shims under the footplates of the storage system. Make sure these levelling shims are placed correctly.

The slab must have the proper resistance to bear the pressure transmitted by the frame footplates.

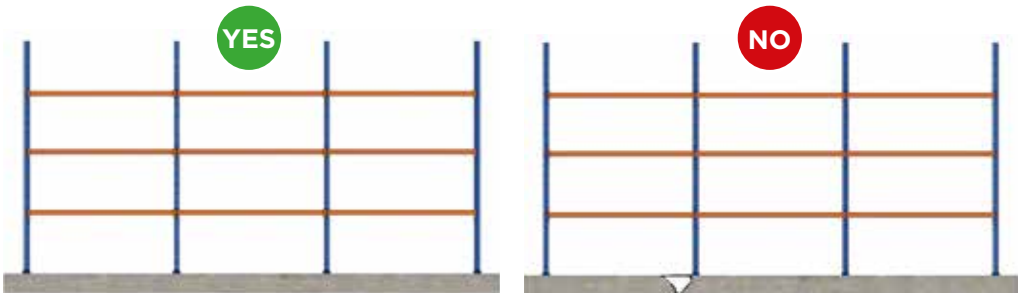

Resistance
The floor must not have areas that appear to have sunken, as this may cause the installation to collapse. The floor must have the proper resistance to bear the loads that the storage system transmits onto the footplates.

If areas of the slab begin to sink or shift, the frame verticality may be at risk. Any irregularities in the floor can be corrected by using levelling shims, which must be perfectly lodged beneath the footplates. Any incorrect positioning of these shims will increase the pressure on the slab and even cause the frame to be out of aplomb.

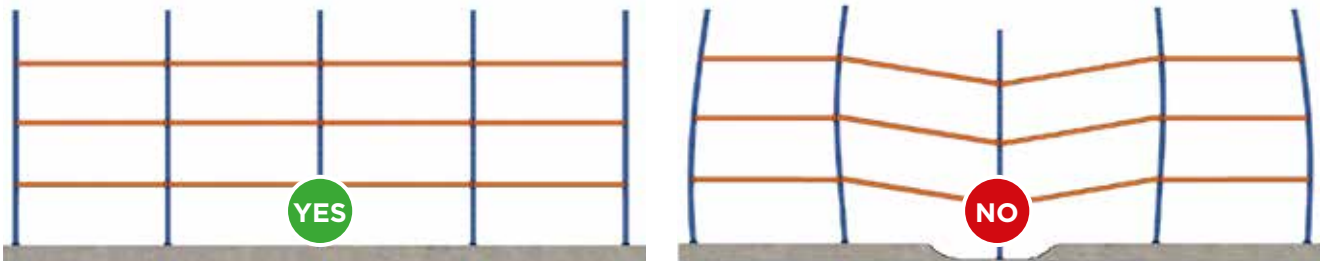

Cleanliness
All passageways, operating aisles and areas with traffic must be kept clean and obstacle-free to create safe operating conditions. In other words:

- Do not put obstacles in the middle of the aisle, to minimise the risk of blows against the storage system.
- Avoid oil spots, spilt liquid or anything else that may cause the handling equipment to lose traction or personnel to slip and fall.

Inspecting unit loads

Keep a close eye on the pallets to ensure they are in good condition, replacing any which are damaged as stipulated in the EN 15635 standard, annex C.

Moreover, a pallet may no longer be used if:

- Nail heads or ends are sticking out of the slats.
- The wrong parts were used to make it (the slats or spacers are too thin, narrow or short).
- The general condition of the pallet is so poor that it cannot handle its load capacity (e.g. rotten slats, warped or bent slats and/or spacers) or there is a risk of getting the merchandise dirty.

Skid pallets can no longer be used if, in addition to the previous deficiencies:

- Their slats are broken or missing.
- There is wood missing in the guide skids to the point where two or more nails are visible on one slat, or one or more nails are visible on more than two slats.
- The spacers are missing, broken or warped, or set in such a way that a nail is visible.
- Its required labelling is absent or illegible.

The previously mentioned indications are also valid for any type of pallet on the market today.

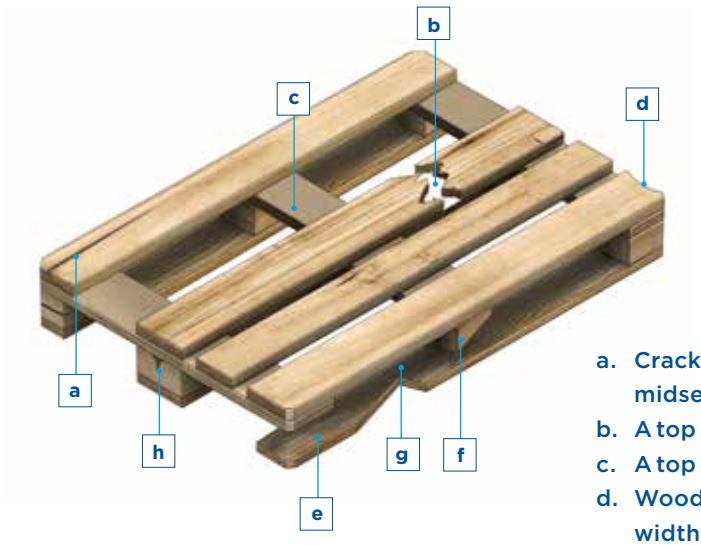

a. Cracks in any of the top slats along the width or length of its midsection.
b. A top slat is broken.
c. A top slat is missing.
d. Wood is missing on a top slat over more than a third of its width.
e. A spacer is missing.
f. A spacer(s) is turned more than 30º
g. Wood is missing on a top slat between two spacers and in more than ¼ of its width, or when the nails are visible .
h. Wood is missing or there are cracks in the spacers in the midsections or at the top of the spacer.

Pallets and containers set aside due to wear and tear must be kept apart and under control, using a system that impedes their reuse or return to the warehouse.

Make sure that merchandise located on the pallets is kept in good condition, stabilised and strapped down and/or shrink-wrapped.

Make sure unit loads do not surpass:
- The maximum nominal weight established for the design and use of the warehouse.
- The maximum nominal dimensions established for the design and use of the warehouse.

Standardised pallets must adhere to the stipulations in the corresponding regulations:

- **EN 13382**: Flat pallets for handling merchandise. Principal dimensions.
- **EN 13698-1**: Pallet production specification. Construction specification for 800 mm x 1,200 mm flat wooden pallets. (part 1)
- **EN 13698-2**: Pallet production specification. Construction specification for 1,000 mm x 1,200 mm flat wooden pallets. (part 2)

For example, below it shows an 800 x 1,200 mm Euro pallet, which is the most commonly used pallet.

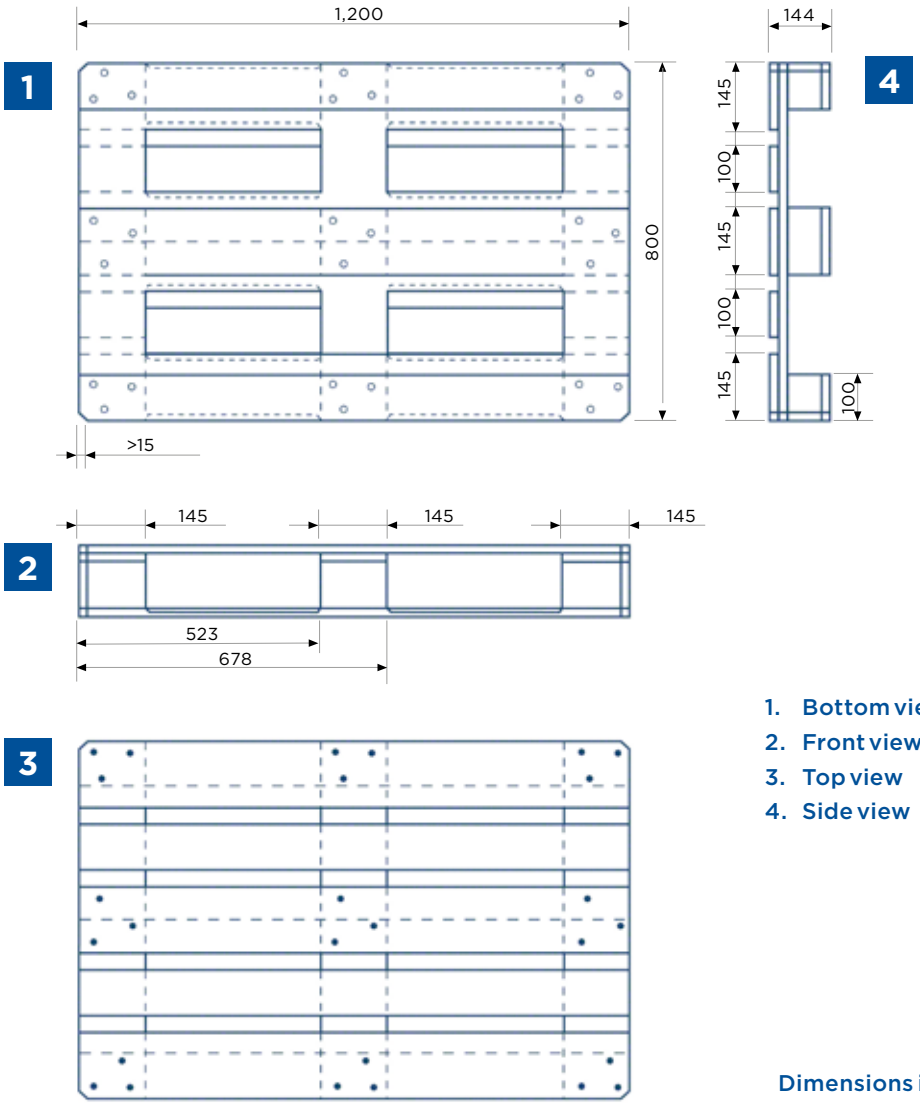

1. Bottom view
2. Front view
3. Top view
4. Side view

Dimensions in mm.

Inspecting handling equipment

Equipment in operation
In this section, it lists some general guidelines to keep in mind when operating equipment like a forklift. However, installation users must follow the specific instructions for these types of machines provided by the manufacturer.

The forklift operator must inspect a vehicle's main safety measures each day, checking the condition and operation of:

- the steering system,
- the horn,
- the turning and warning lights,
- reverse gear beeper ,
- general brakes and parking brake,
- the driver retention system (safety belt),
- the structural safety equipment ,
- the forks and the lifting and tipping systems,
- the condition of the tires,
- the oil levels and condition of the battery (cleaned and properly connected,)
- the access area's cleanliness,
- for any warning signs or indications that the machine should be taken out of service.

If there are any irregularities, report this immediately to your direct superior and stop using the forklift.
If the forklift is not working, make sure to label it, describing said problems.
Smoking is prohibited while operating a forklift or while handling the battery.

Parking
Once you finish operating the forklift, the following must be carried out:
- Park it in the forklift parking zone. Never park it on a ramp or slope.
- Set the parking brake.
- Put the gears in neutral.
- Lower the forks as far as possible.
- Tip the forks forward.
- Stop the motor.
- Safeguard the forklift against improper use. The ignition key must be in the sole possession of the authorised driver, who must remove it when leaving the vehicle.

Check before operating.

Disabled forklift

Parked

Other considerations

Paint imperfections. Make note of any damages to the body paint that leaves the steel bare, especially in places with harsh environments.

Incidents with the racks. Many incidents that occur with storage systems can create hazardous conditions. As such, we recommended contacting the rack manufacturer immediately so it can make a quick evaluation of the damage and repair your storage system in order to re-establish the service level to top safety conditions.

The Mecalux Group has a **technical inspection department**, which acts on its own initiative or when contacted by a customer. It revises installations where the high volume of handling equipment may lead to greater wear of the structural components. It checks that your racks are in proper working condition, and ensures that the user safety guidelines are being followed. The Mecalux Group provides its customers with warehouse safety manuals, so that warehouse operators use the racking systems appropriately and safely.

Validation of handling equipment

Spain has its own regulation (UNE 58014) on the validation of new handling equipment. This validation has three parts, including:

- Documentary validation
- Calculation validation
- Assembly validation.

MECALUX

Safety checklist for adjustable pallet racking.

Date: ...../...../.....

RACK	FRAME NO.	FRONT	REAR	FRAMES Type: ..... Height ..... mm Depth .....mm							
				Uprights			Diagonals in poor condition	Levelling shims in poor condition	Anchor bolts in poor condition	Verticality	
				Green	Amber	Red				Good	Bad

RACK	BAY	LEVEL	FRONT	REAR	BEAMS Type: ..... Length ..... mm				OTHER ELEMENTS IN POOR CONDITION			
					Green	Amber	Red	Missing safety pins	Cross-bracing		Protection	
									Vertical	Horizontal	Upright	Frame

COMMENTS

If after the safety check, a component(s) does not meet any of these safety points, contact the Mecalux technical inspection service.

HEAD OFFICE - SPAIN
Tel. +34 932 616 913 – info@mecalux.com – mecalux.com

EUROPE

BELGIUM
Tel. +32 2 346 90 71
info@mecalux.be
mecalux.be

CROATIA
Tel. +386 41 379 122
pisarna@mecalux.com
mecalux.hr

CZECHIA
Tel. +420 222 524 240
info@mecalux.cz
mecalux.cz

FRANCE
Tel. +33 0 160 11 92 92
info@mecalux.fr
mecalux.fr

GERMANY
Tel. +49 (0) 2133 5065 0
info@mecalux.de
mecalux.de

ITALY
Tel. +39 02 98836601
info@mecalux.it
mecalux.it

NETHERLANDS
Tel. +31 208 08 30 96
info@mecalux.nl
mecalux.nl

POLAND
Tel. +48 32-331 69 66
info@mecalux.pl
mecalux.pl

PORTUGAL
Tel. +351 21 415 18 90
info@mecalux.pt
mecalux.pt

ROMANIA
Tel. +40 753 098 246
romania@mecalux.com
mecalux.ro

SLOVAKIA
Tel. + 421 220 545 117
info@mecalux.sk
mecalux.sk

SLOVENIA
Tel. +386 41 379 122
pisarna@mecalux.com
mecalux.si

SPAIN
Tel. + 34 932 616 913
info@mecalux.es
mecalux.es

TURKEY
Tel. +90 216 706 10 15
info@mecalux.com.tr
mecalux.com.tr

UNITED KINGDOM
Tel. +44 121 3336 602
info@mecalux.co.uk
mecalux.co.uk

AMERICAS

ARGENTINA
Tel. +54 (11) 4006-4444
info@mecalux.com.ar
mecalux.com.ar

BRAZIL
Tel. +55 19 3809-6800
info@mecalux.com.br
mecalux.com.br

CHILE
Tel. +56 (2) 2827 6000
info@mecalux.cl
mecalux.cl

COLOMBIA
Tel. +57 01 8000 423 553
info@mecalux.com.co
mecalux.com.co

MEXICO
Tel. +52 800 030 0185
info@mecalux.com.mx
mecalux.com.mx

URUGUAY
Tel. +598 2683-8879
info@mecalux.com.uy
mecalux.com.uy

US
Tel. +1 (877) 632-2589
info@interlakemecalux.com
interlakemecalux.com

Mecalux has commercial offices in 26 countries

Argentina - Belgium - Brazil - Canada - Chile - Colombia - Croatia - Czechia - Estonia
France - Germany - Italy - Latvia - Lithuania - Mexico - Netherlands - Poland - Portugal - Romania
Slovakia - Slovenia - Spain - Turkey - UK - Uruguay - US

MECALUX

Mecalux offers its customers a Technical Inspection Service on completion of an installation, as well as yearly inspections, advice and consultancy on damages, modification or expansion of storage systems.

If an accident occurs at your installation, please notify our technical inspection department immediately. We will respond quickly and will properly inspect, identify damages and/or provide repairs to your installation.

We are always in pursuit of the highest quality controls, which has been a cornerstone of how we do business and how we offer better customer care.

MK-085121-05/23 - ©MECALUX,SA